ABF16S-IPL

SpringH2O® Sensor Bottle Filler

Specification

Manufactured from lead-free #304 stainless steel with all exposed surfaces in satin finish. Sensor operated valve with strainer to ensure touch-free operation. Perforated drain for hygiene & ease of cleaning. Unit is non-refrigerated, but refrigerated options are also available upon request. Suitable for outdoor installation.

Inlet Connection:	1/2" BSP
Outlet Connection:	40mm BSP waste
Water Pressure:	200 – 500 kPa
Water Temperature:	4 - 30°C
Flow Rate:	3.8 LPM Laminar flow
Power Requirement:	9V (Transformer included)

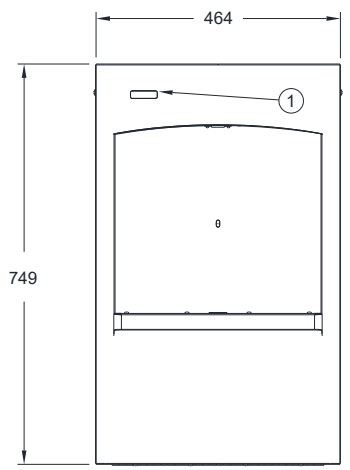

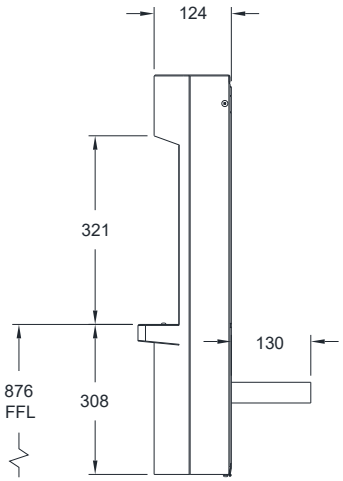

GENERAL NOTES:
1. OPTIONAL -BCD BOTTLE COUNTER AND FILTER REPLACEMENT DISPLAY

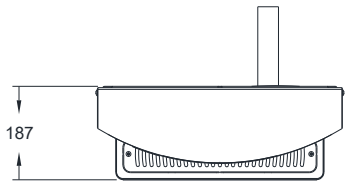

Measurements in mm

Resources

Installation Guide - Warranty & Cleaning Guide - CAD Drawing

As improvements in the design and performance of Bubblers Australia products are continuous, specifications may be subject to change without notice. The illustrations and descriptions herein are applicable to production as of the date of this Technical Data Sheet. Revised 09/26 © 2026 by Bubblers Australia TD/ModelABF16S-IPL/0926