AA461400P

Classic Drinking Fountain

Specification

Manufactured from stainless steel with all exposed surfaces in satin finish. Stainless steel, shielded bubbler with self-closing push button. Valve includes flow adjuster and strainer. Perforated drain for hygiene & ease of cleaning. Exposed pipework where security/aesthetics is not critical. Unit is non-refrigerated.

Inlet Connection:	1/2" BSP
Outlet Connection:	40mm BSP Waste
Water Pressure:	200 – 500 kPa
Water Temperature:	4-30°C
Basin and Housing:	1.6mm, Type 304 Stainless Steel

Lead Free
WMTS105
Lic. 022317

LEAD-FREE WATER

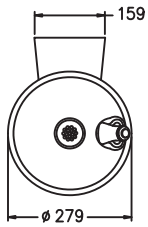

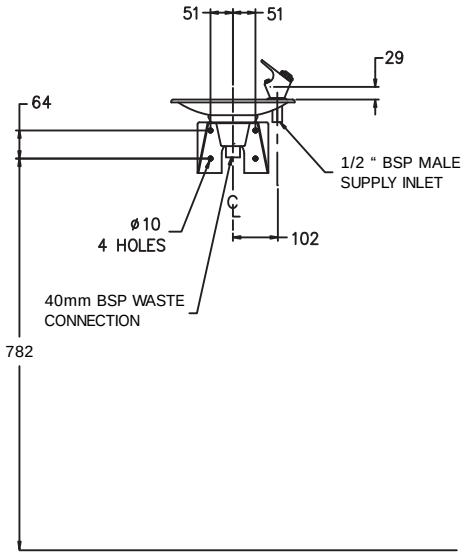

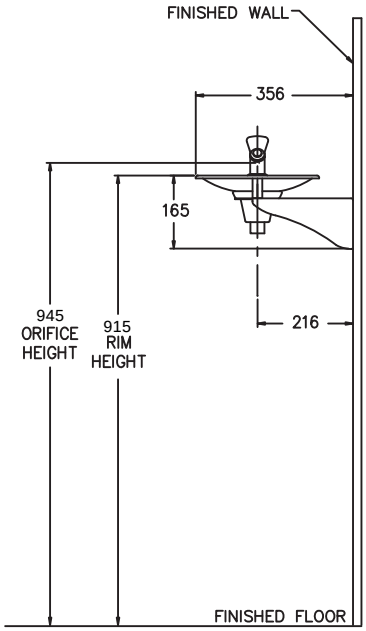

Measurements in mm

Resources

Installation Guide - Warranty & Cleaning Guide - CAD Drawing

As improvements in the design and performance of Bubblers Australia products are continuous, specifications may be subject to change without notice.The illustrations and descriptions herein are applicable to production as of the date of this Technical Data Sheet. Revised 03/26 © 2026 by Bubblers Australia TD/ModelAA461400P/0326